Power Stage

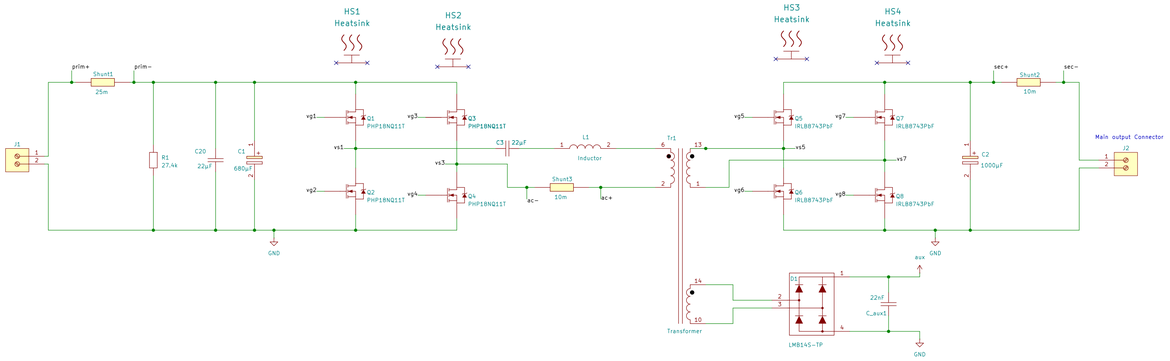

Test Points

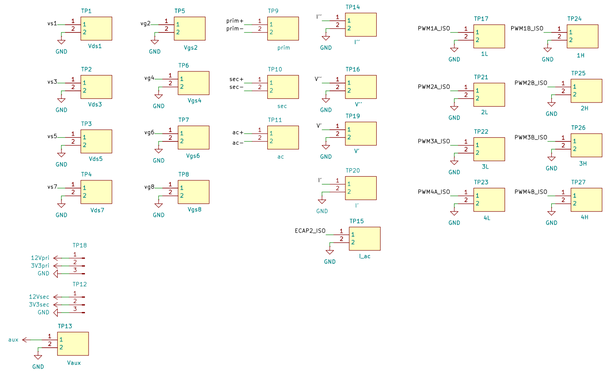

Gate Driver on the Primary Side

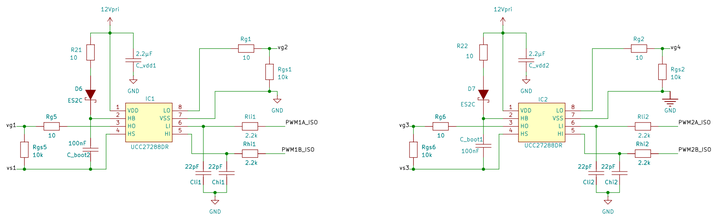

Gate Driver on the Secondary Side

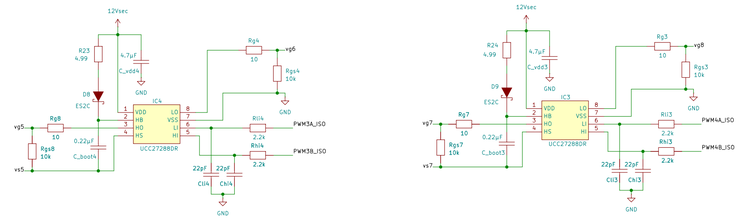

Primary Auxiliary Power Supply

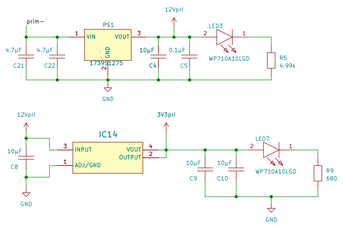

Inductor Over Current Detection Circuit

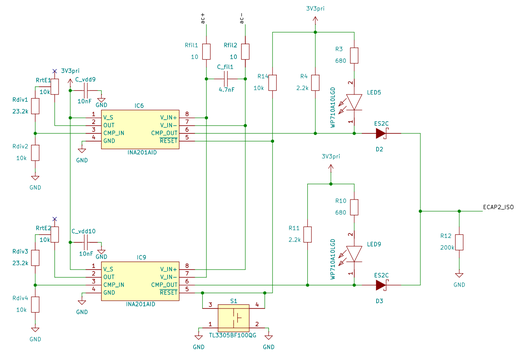

Secondary Auxiliary Power Supply

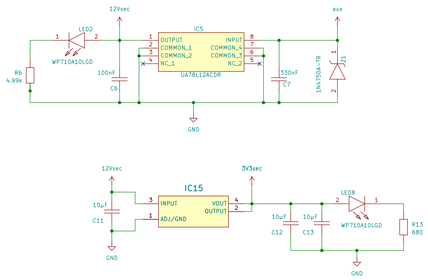

LED

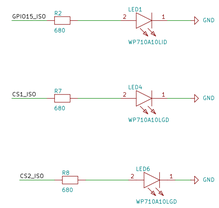

Primary Sensing Circuit

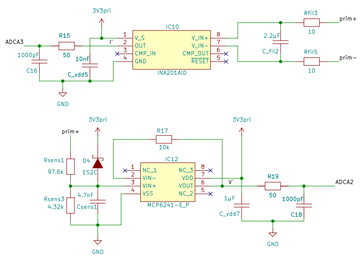

Secondary Sensing Circuit

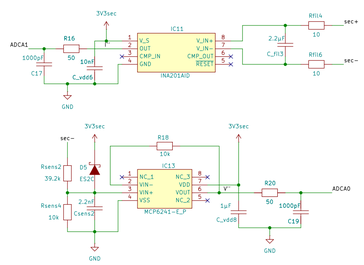

Connector to Controller (Don't Change!)

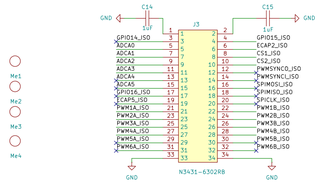

Ruble Luo Loris Bregy EPFL	EE-365 DAB Converter Group 04
Sheet: / File: DAB_converter.kicad_sch	
Title: DAB Converter	
Size: A1 Date: 2026-04-21 KiCad E.D.A. 10.0.1	Rev: v1 Id: 2/1